RoHS Compliant

REV	SIGN	DATE	DESCRIPTION	APPROVER
A0		2021.05.08	Initial Release	LENA

THIS IS CAD DRAWING, DO NOT REVISE MANUALLY!!!

AUTHORISED REPRESENTATIVE:
MEDs Interconnect Pte Ltd
5012 Ang Mo Kio Avenue 5, #03-09
Techplace II (East Wing), Singapore 569876
Email: sales.marketing@meds-int.com
Tel: +65 6235 6355

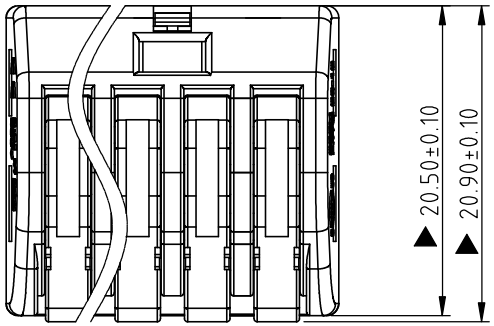

Material:
- Item ⓐ Terminal Cover: PA66+16%GF,
- Item ⓑ Terminal Bottom Cover: PA66+16%GF ,
- Item ⓒ Terminal Contact: Copper,
- Item ⓓ Spring: SUS301 EH
- Item ⓔ Lever: PA66,

Electrical:	cULus	IEC
Voltage rating:	600 V	400V
Current rating:	24A	32A
Wire range(AWG):	12-28AWG	0.08-4mm²
Wire strip length:	8-10 mm	
Withstanding Voltage:	2.2KV	3.4KV
Insulation Resisance:	DV500V 500MΩ min	
Operating temperature:	-40°C to +85°C	
Safety Approval:	c us	

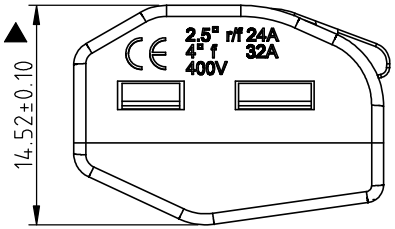

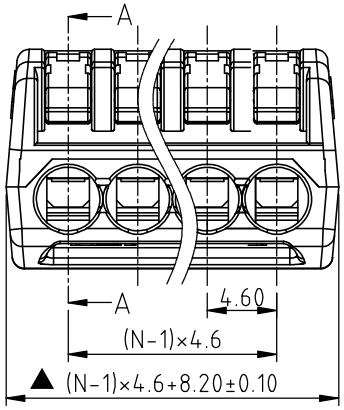

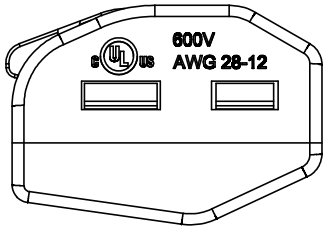

Part No. N2xx00800000G

- NO. OF POLES
  - 02: 2 POLES
  - 03: 3 POLES
  - 05: 5 POLES
- Body Color:
  - 8 Grey(RAL7004)
- RoHS compliant (lead<4%) In copper Alloy

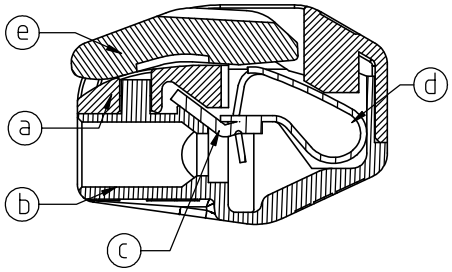

Section A-A

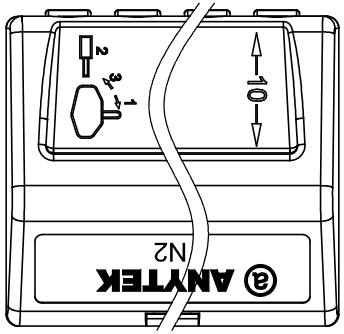

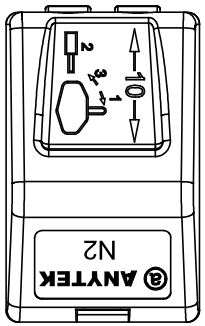

2P

Amphenol ANYTEK

CUSTOMER COPY

ALL RIGHTS RESERVED. REPRODUCTION OR ISSUE TO THIRD PARTIES IN ANY FORM WHATEVER IS NOT PERMITTED WITHOUT WRITTEN AUTHORITY FROM THE PROPRIETOR. PROPERTY OF ANYTEK TECHNOLOGY CO., LTD

TITLE	N2 Series ,pitch 4.60mm				
PART NO.	N2xx00800000G			DWG NO.	8N20002
APPROVED	CHECKED	DESIGNED	DRAWN	CUST NO.	
		Lena 2021.05.08	Lena 2021.05.08	UNIT: mm	
				SCALE: 2:1	
				SHEET: 01/01	REV.: A0

Tolerance	
X.	±0.50
X.X	±0.30
X.XX	±0.10
X°	±1°